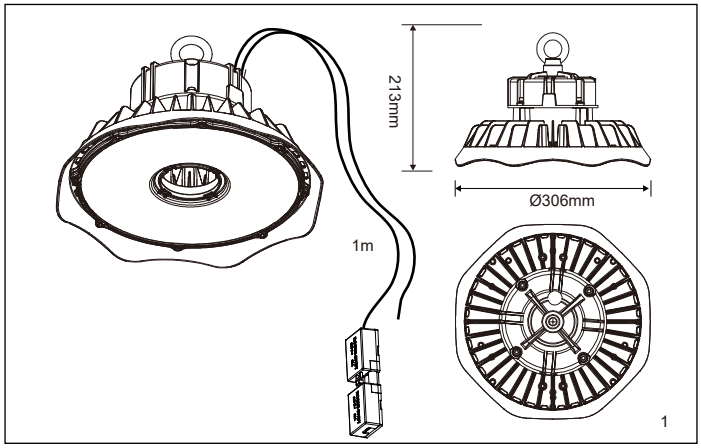
213mm
Ø306mm
1m
1

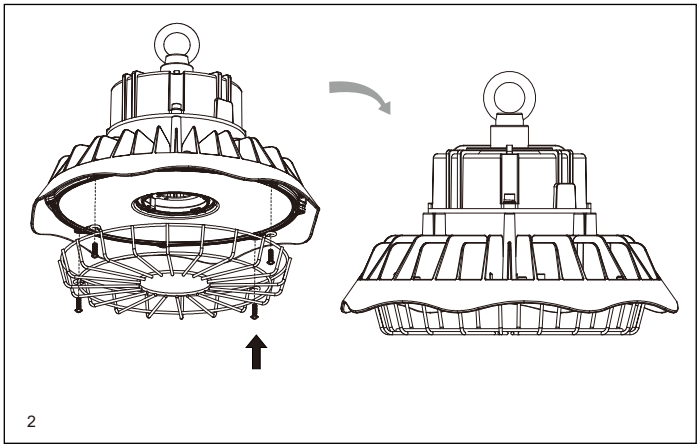
2

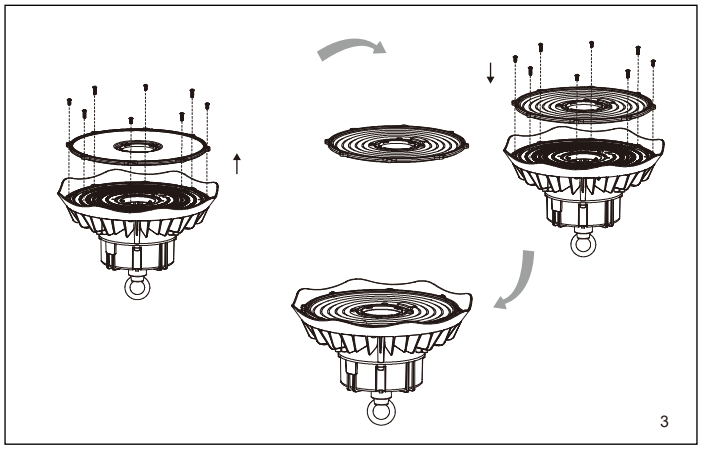
3

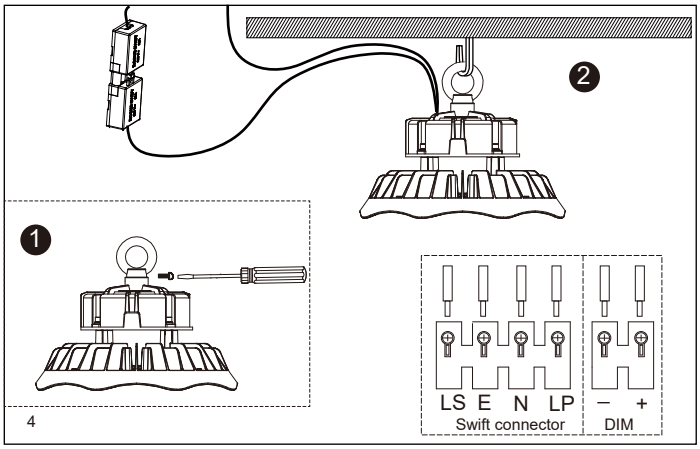
1
2
LS E N LP
Swift connector
− +
DIM
4

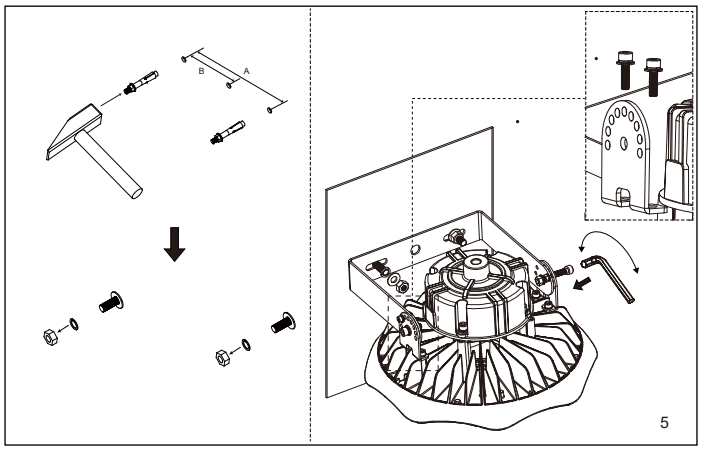
B
A
5

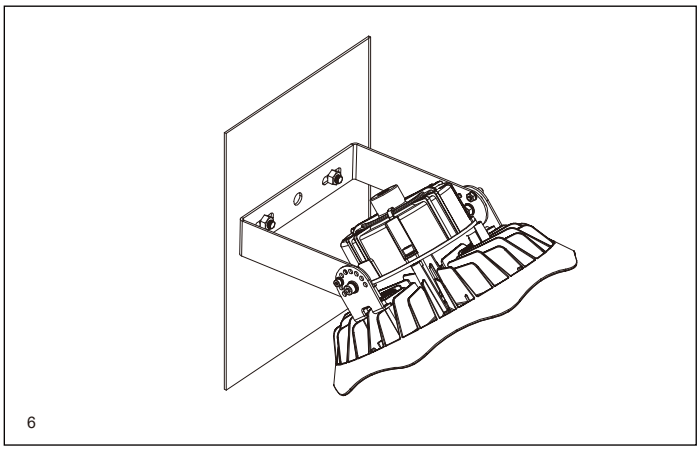
6